MICRO SWITCH
a Honeywell Division
FED.MFG.CODE 91929

SWITCH–BASIC

CATALOG LISTING
V7–1A27D8–207
CW–B0470

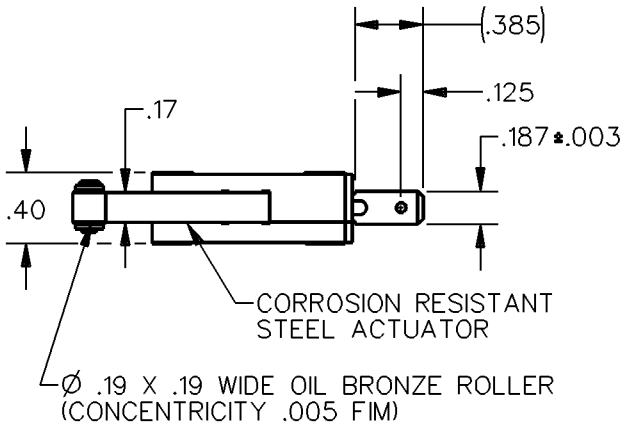

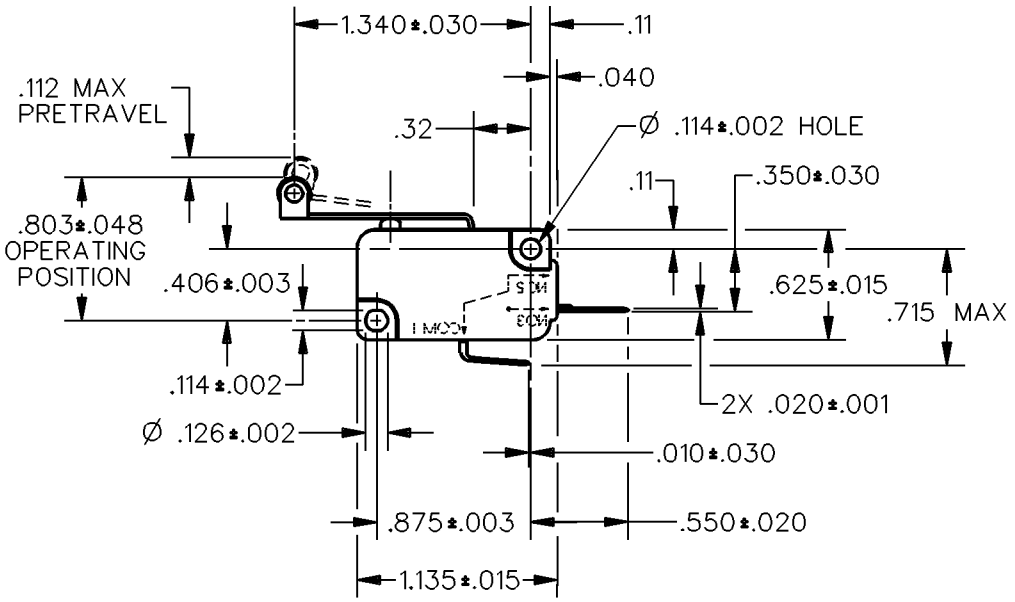

ANSI Y14.5M–1982 APPLIES

THIS DRAWING COVERS A PROPRIETARY ITEM AND IS THE PROPERTY OF MICRO SWITCH, A DIVISION OF HONEYWELL. THIS DRAWING IS NOT TO BE COPIED OR USED WITHOUT THE APPROVAL OF MICRO SWITCH.

THIRD ANGLE PROJECTION

CHARACTERISTICS	ELECTRICAL DATA	SCALE FULL — DO NOT SCALE PRINT
OPERATING FORCE — — — 86 GRAMS MAX	CONTACT ARRANGEMENT S P N O	UNLESS OTHERWISE SPECIFIED TOLERANCES ARE
RELEASE FORCE — — — 9 GRAMS MIN		ONE PLACE (.0) ±.030
DIFFERENTIAL TRAVEL — — — .025 MAX	L162 5A 125, 250, 277 VAC 1/10HP 250 VAC	TWO PLACE (.00) ±.015
OVERTRAVEL — — — — — — .064 MIN		THREE PLACE (.000) ±.005
RELEASE TRAVEL — — — — — .016 MIN		ANGLES ±
		WEIGHT

CATALOG LISTING V7–1A27D8–207
ISSUE 2
REPLACES
RELEASE NO. PR–19258
CHECK
REVISIONS
A CO–76440 JWB 30 NOV 93
CHECK
DRAWN J A L 24 MAY 91
CHECK D C S 4 JUN 91
DDM/CAD